EN Assembly Instructions # Lumo60-4F

DE Montageanleitung ES Instrucciones de montaje IT Instruzioni di montaggio FR Instrucctions de montage

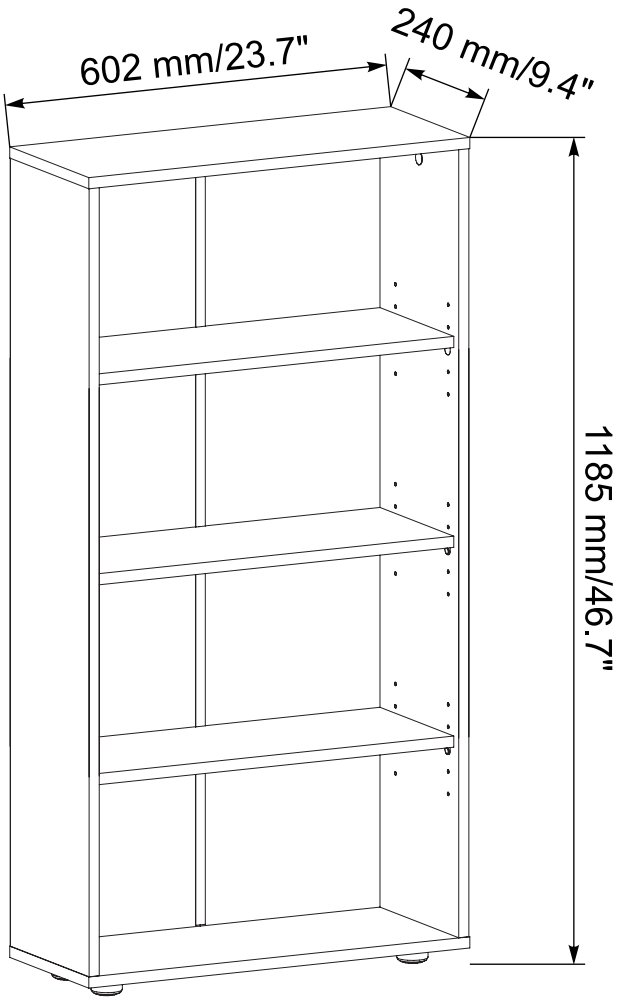

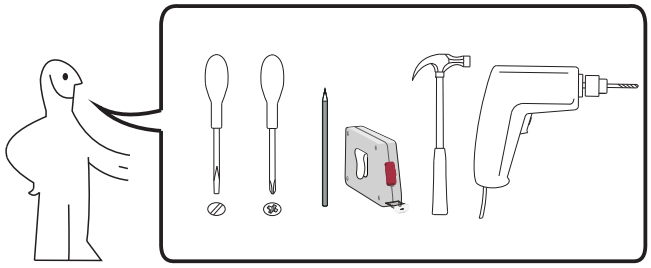

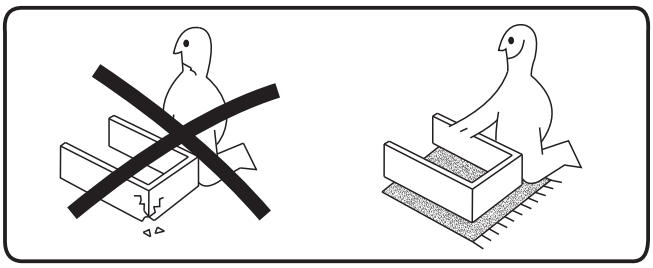

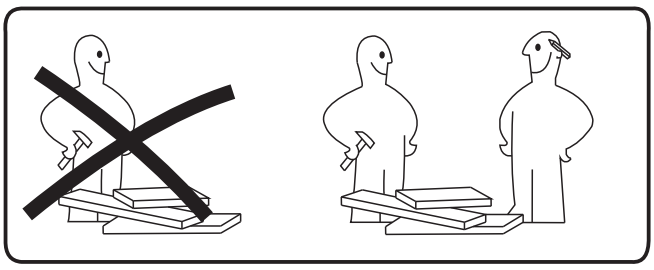

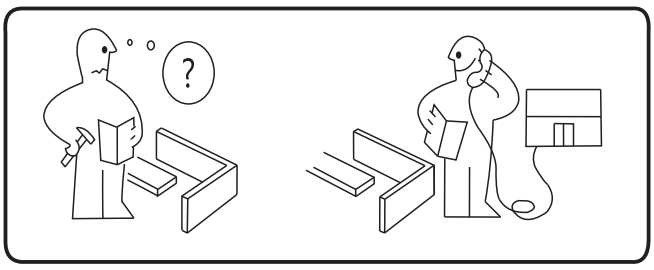

© 04.2024

EN	Video assembly instructions (Scan QR code)
DE	Video-Montageanleitung (QR-Code scannen)
ES	Instrucciones de montaje en vídeo (Escanear código QR)
IT	Istruzioni di montaggio video (Scansiona il codice QR)
FR	Instructions de montage vidéo (Scannez le code QR)

Box 1:

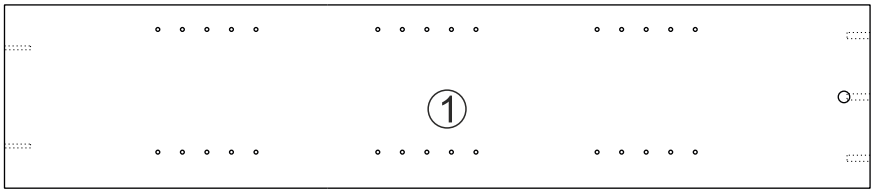

1128x239x16 mm 44.4x9.4x0.6 "

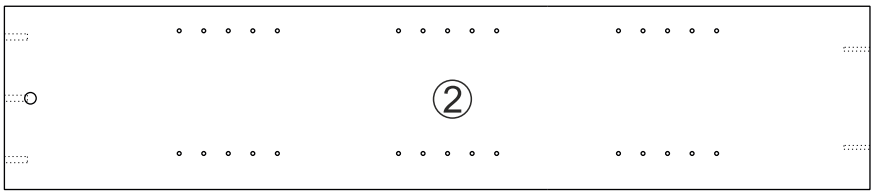

1128x239x16 mm 44.4x9.4x0.6 "

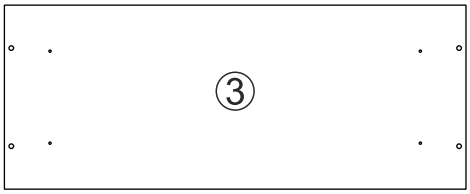

602x240x16 mm 23.7x9.4x0.6 "

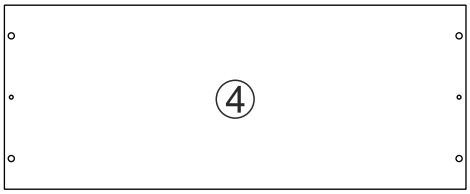

602x240x16 mm 23.7x9.4x0.6 "

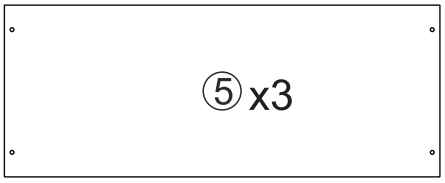

568x224x16 mm 22.3x8.8x0.6 "

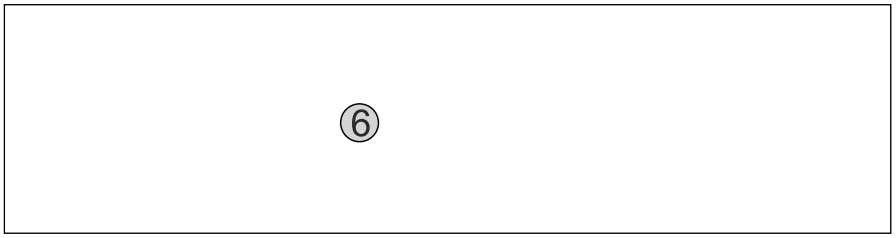

1156x298x3 mm 45.5x11.7x0.1 "

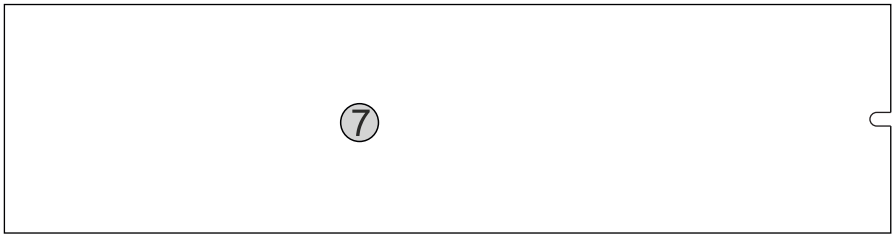

1156x298x3 mm 45.5x11.7x0.1 "

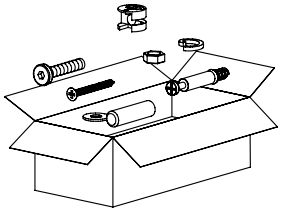

EN Scope of delivery

Lumo60-4F

DE Lieferumfang ES Alcance del suministro IT Volume di fornitura FR Contenu de la livraison

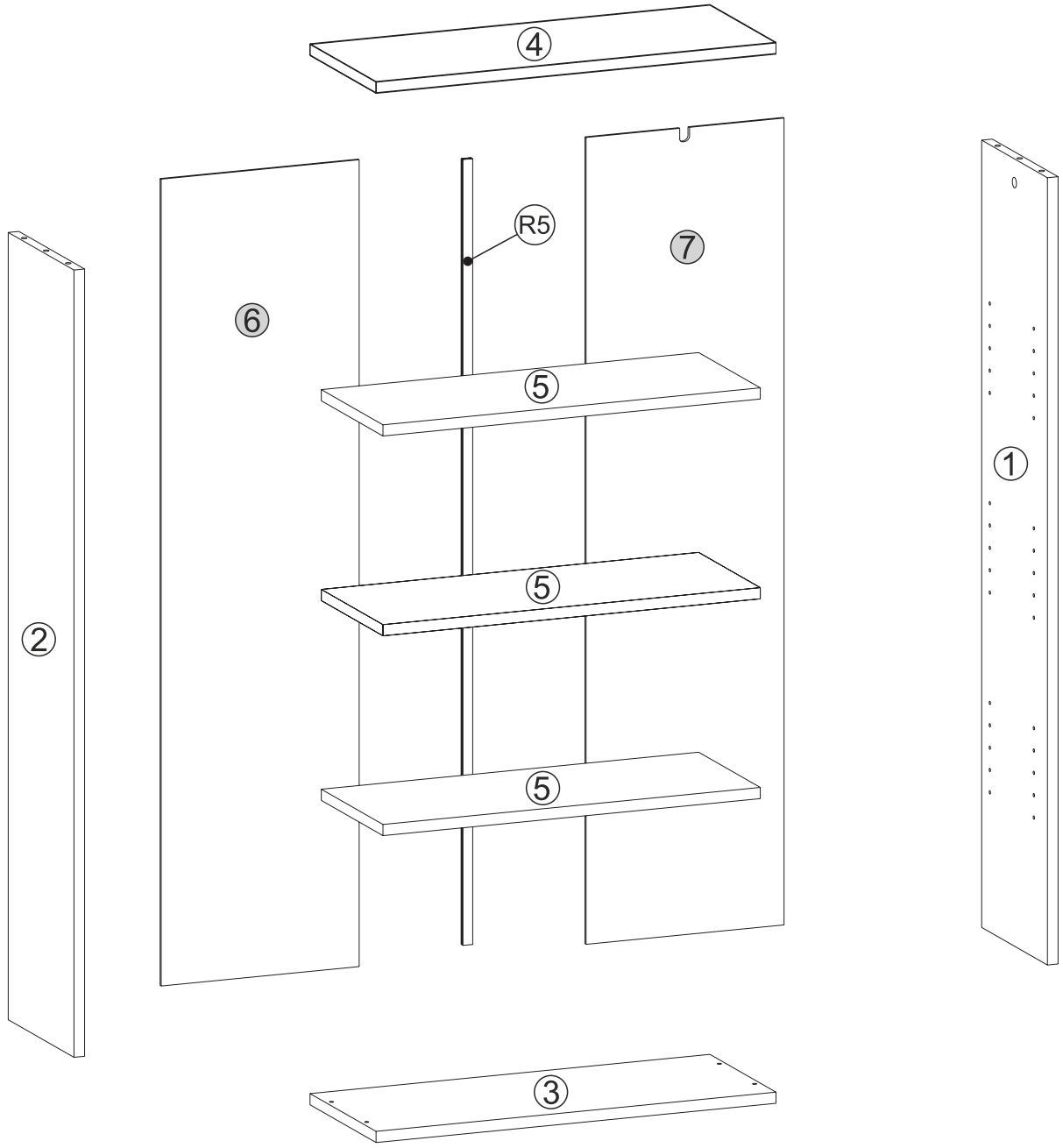

C1 6x43 mm x2	D x2	D1 16 mm x2	S7 x1	R5 L=1126mm x1	
E8 x1	E3 ⌀ 3,5x16 mm x3	R x1	K10 x4	B x4	
A1 ⌀ 8x30 x4	E1 ⌀ 3,5x25mm x4	J1 x12	Q x40	B1 ⌀ 6,4x50mm x4	

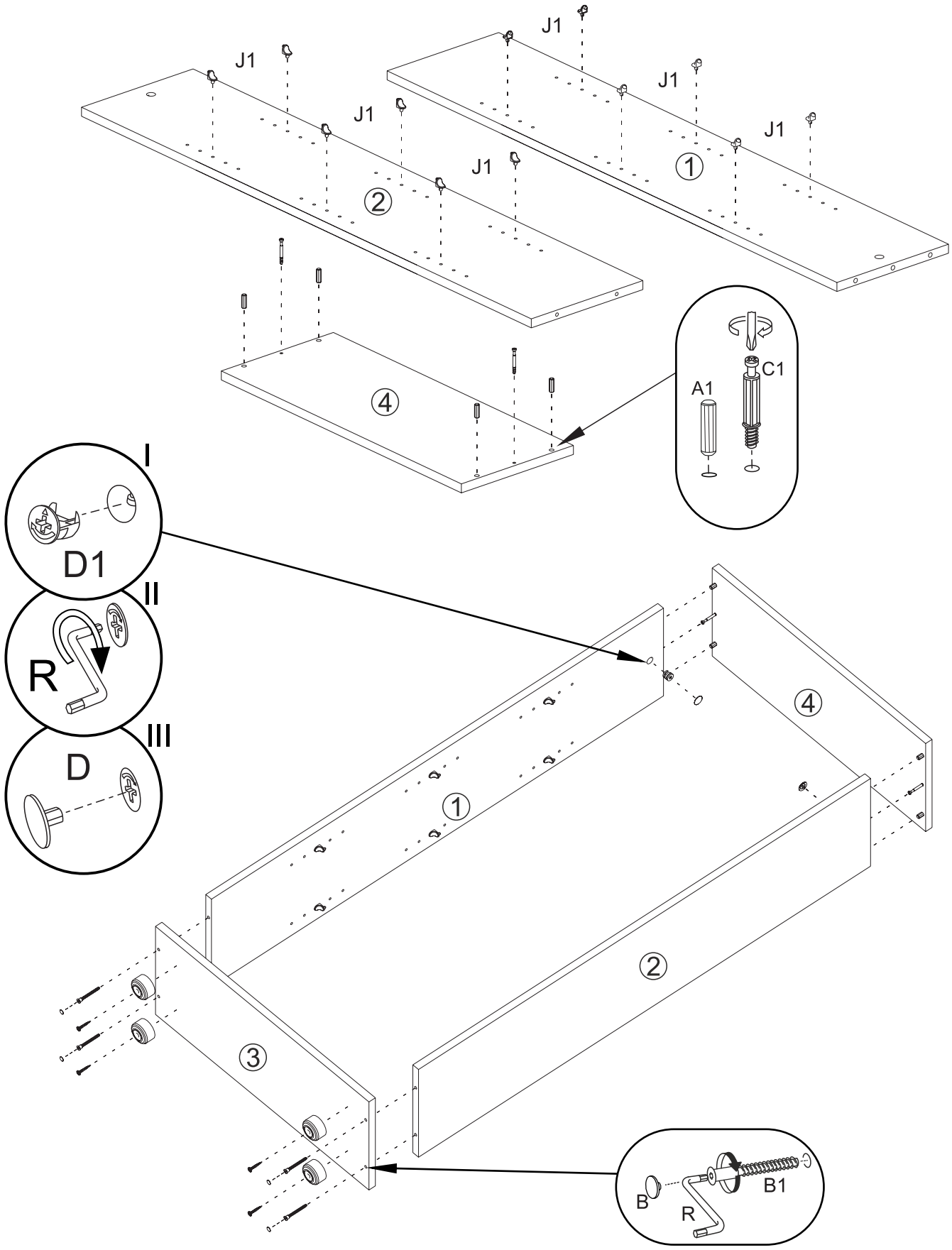

C1 6x43 mm x2	A1 ∅8x30 x4	J1 x12	K10 x4	B x4	
D1 16 mm x2	D x2	R x1	E1 ∅3,5x25mm x4	B1 ∅6,4x50mm x4	

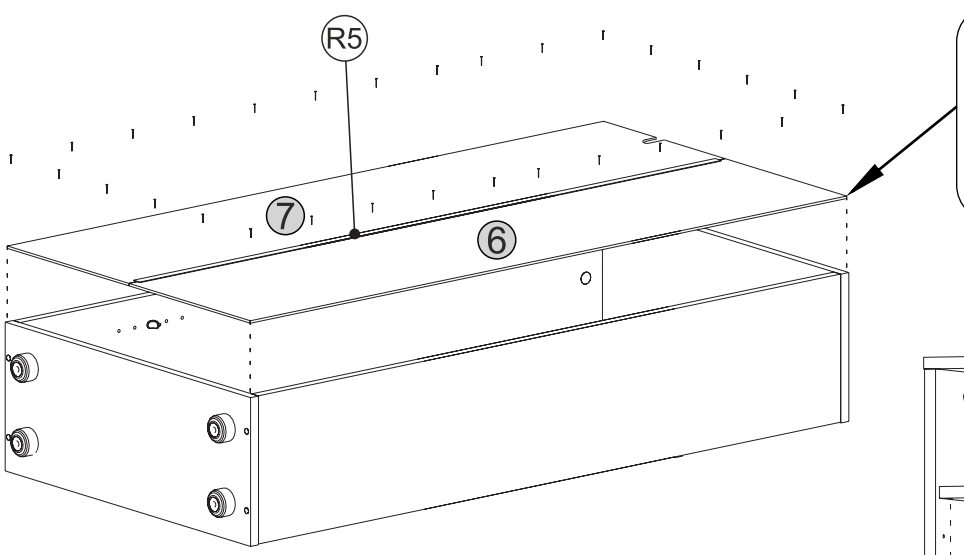

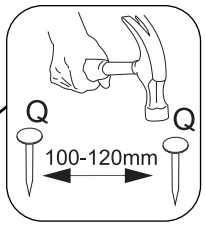

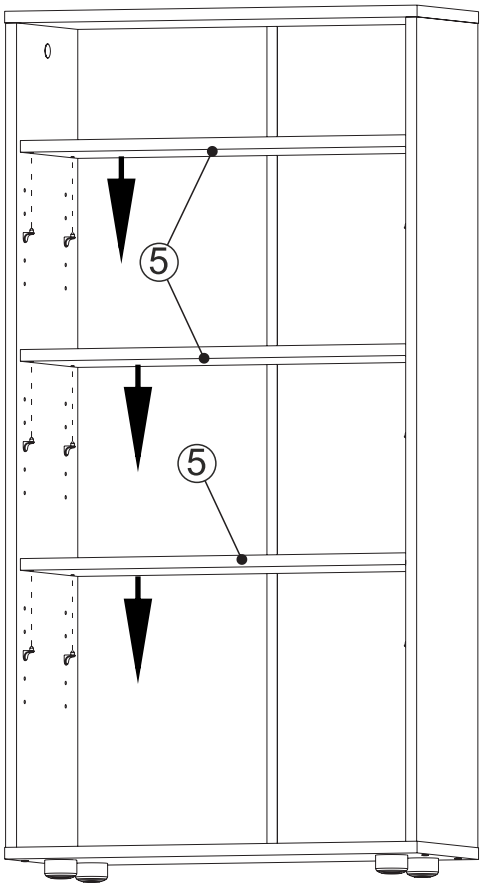

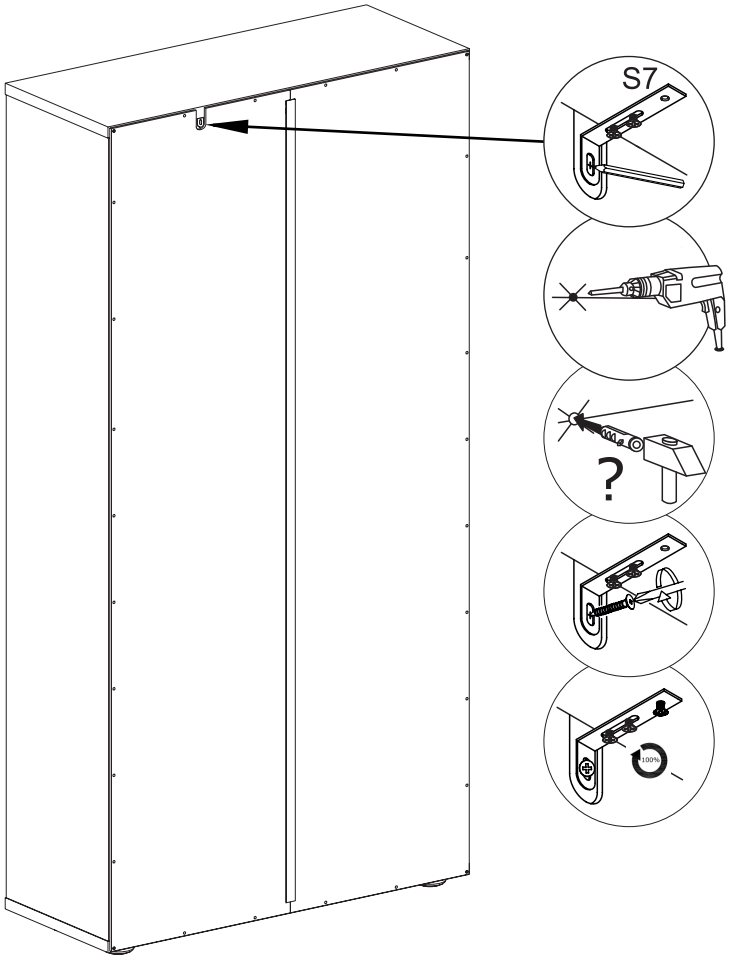

Q	R5	S7		E3	E8	
x40	L=1126mm x1	x1		∅ 3.5x16 mm x3	x1	